The EMPIR initiative is co-funded by the European Union's Horizon 2020 research and innovation programme and the EMPIR Participating States

Mains impedance measurements and defining Artificial Mains Networks for 2-150 kHz EMC testing

J. Meyer, R. Stiegler, V. Khokhlov, University of Technology Dresden, DE

SupraEMI M18 Workshop,
11th November 2020

Background

Mechanism and definition

The EMPIR initiative is co-funded by the European Union's Horizon 2020 research and innovation programme and the EMPIR Participating States

Device D1 draws „non-ideal“ current

↓

„Non-ideal“ voltage drop at network impedance $\underline{Z}_{sc}$

↓

„Non-ideal“ voltage at Point of Connection (POC)

↓

Disturbance of device D2

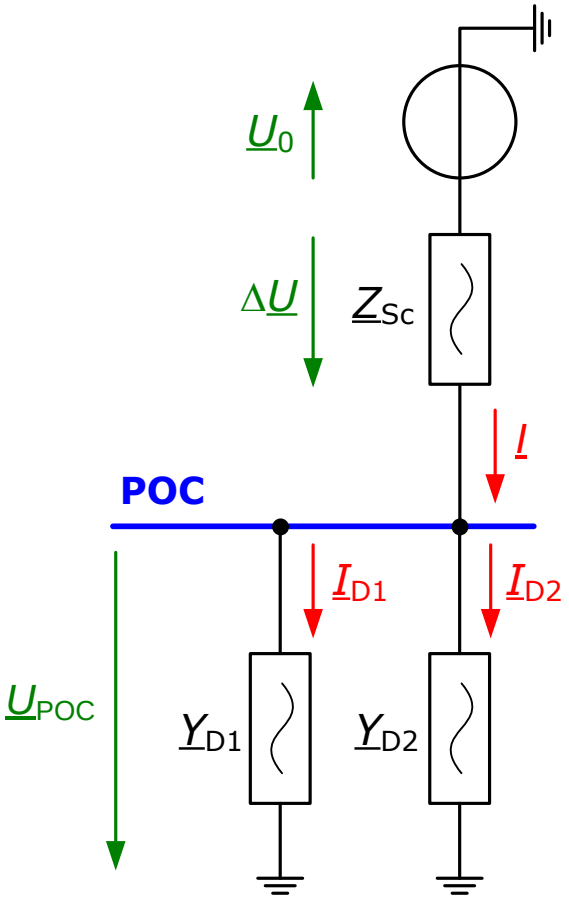

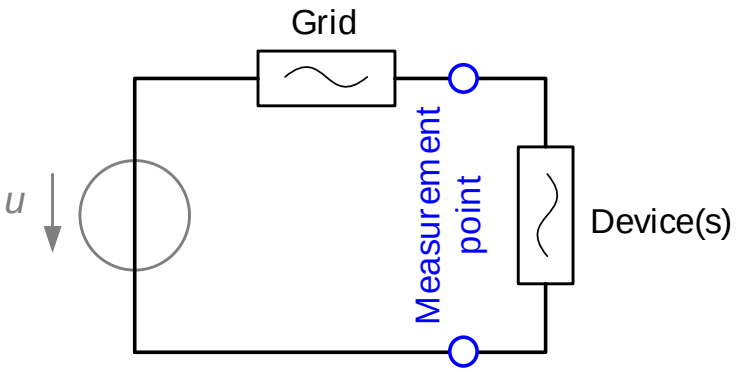

Frequency-dependent network impedance:

- Combination of impedance of the grid and impedance of electrical appliances (customers) connected to the grid

Important for:

- EMC coordination
- Simulation of emission propagation
- Solving customer complaints

Network impedance

Impact of grid-side and device-side

The EMPIR initiative is co-funded by the European Union's Horizon 2020 research and innovation programme and the EMPIR Participating States

- Impedance characteristic determines propagation of emission and levels of disturbance
- *Below 2 kHz:*
  Grid-side impedance usually significant lower than device-side impedance
  -> grid-side impedance dominates the network impedance
- *Above 2 kHz:*
  Impedance of (closeby) electrical appliances is comparable or lower than grid-side impedance
  -> device-side impedance dominates the network impedance

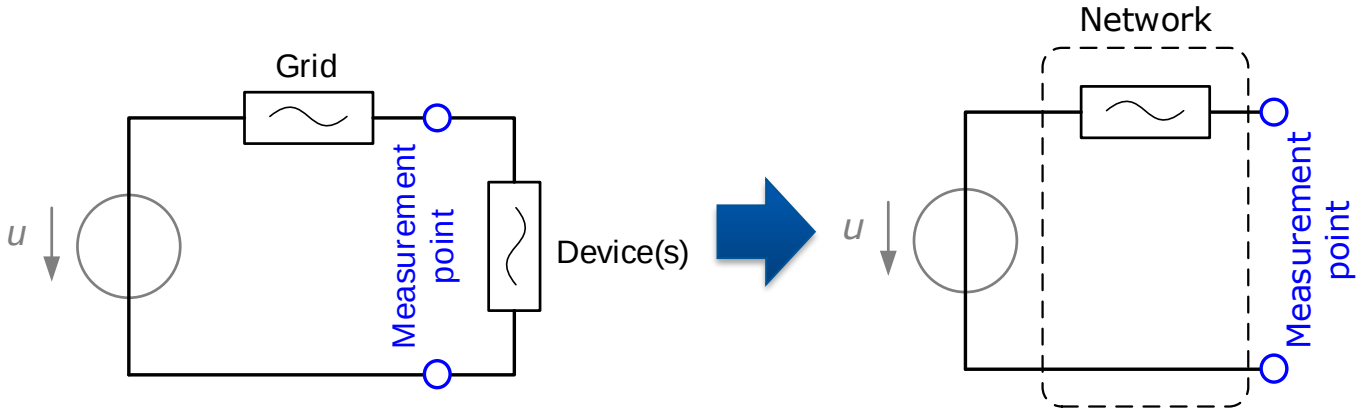

Frequency-dependent input impedance of a PV inverter for roof-top application

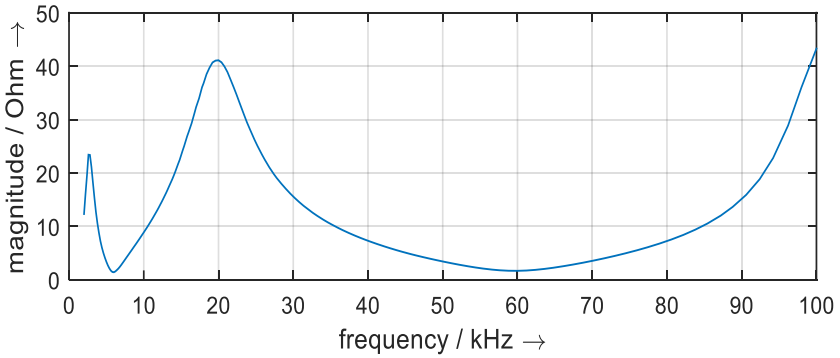

Network impedance

Impact on propagation (upstream)

EMPIR EURAMET
The EMPIR initiative is co-funded by the European Union's Horizon 2020 research and innovation programme and the EMPIR Participating States

Emission propagation

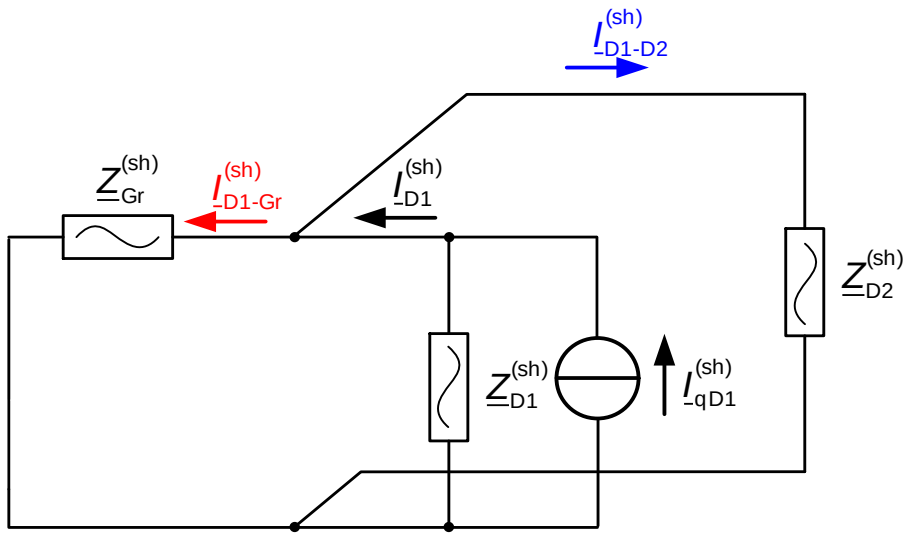

$$\underline{I}_{D1-Gr}^{(sh)} = \underline{I}_{D1}^{(sh)} \frac{1}{1 + \frac{\underline{Z}_{Gr}^{(sh)}}{\underline{Z}_{D2}^{(sh)}}} \qquad \underline{I}_{D1}^{(sh)} = \underline{I}_{qD1}^{(sh)} \frac{1}{1 + \frac{\underline{Z}_{Gr}^{(sh)} \,||\, \underline{Z}_{D2}^{(sh)}}{\underline{Z}_{D1}^{(sh)}}}$$

Current of supplying feeder (I_g) and two charging stations (I_CS1, I_CS2)

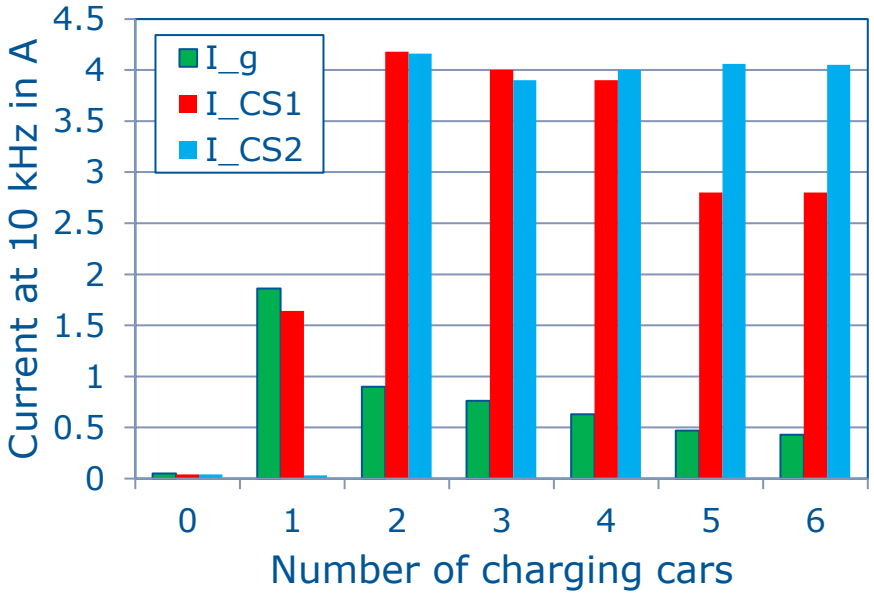

- Grid current reduces with increasing number of EVs
- Current between EVs increases

One device can change the situation completely

Network impedance

Impact on propagation (downstream)

EMPIR EURAMET
The EMPIR initiative is co-funded by the European Union's Horizon 2020 research and innovation programme and the EMPIR Participating States

Emission propagation

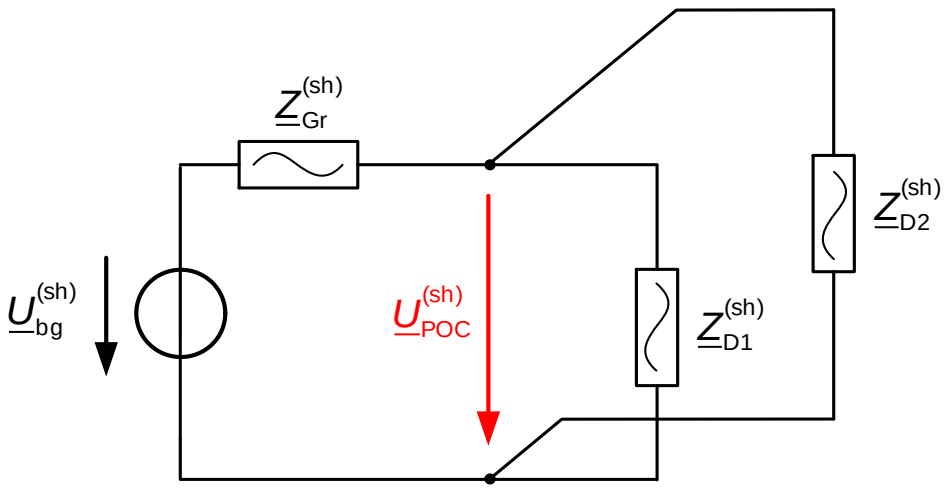

$$\underline{U}_{POC}^{(sh)} = \underline{U}_{bg}^{(sh)} \frac{1}{1 + \frac{\underline{Z}_{Gr}^{(sh)}}{\underline{Z}_{D\,par}^{(sh)}}}$$

Measurement at POC of PV installation with PLC system

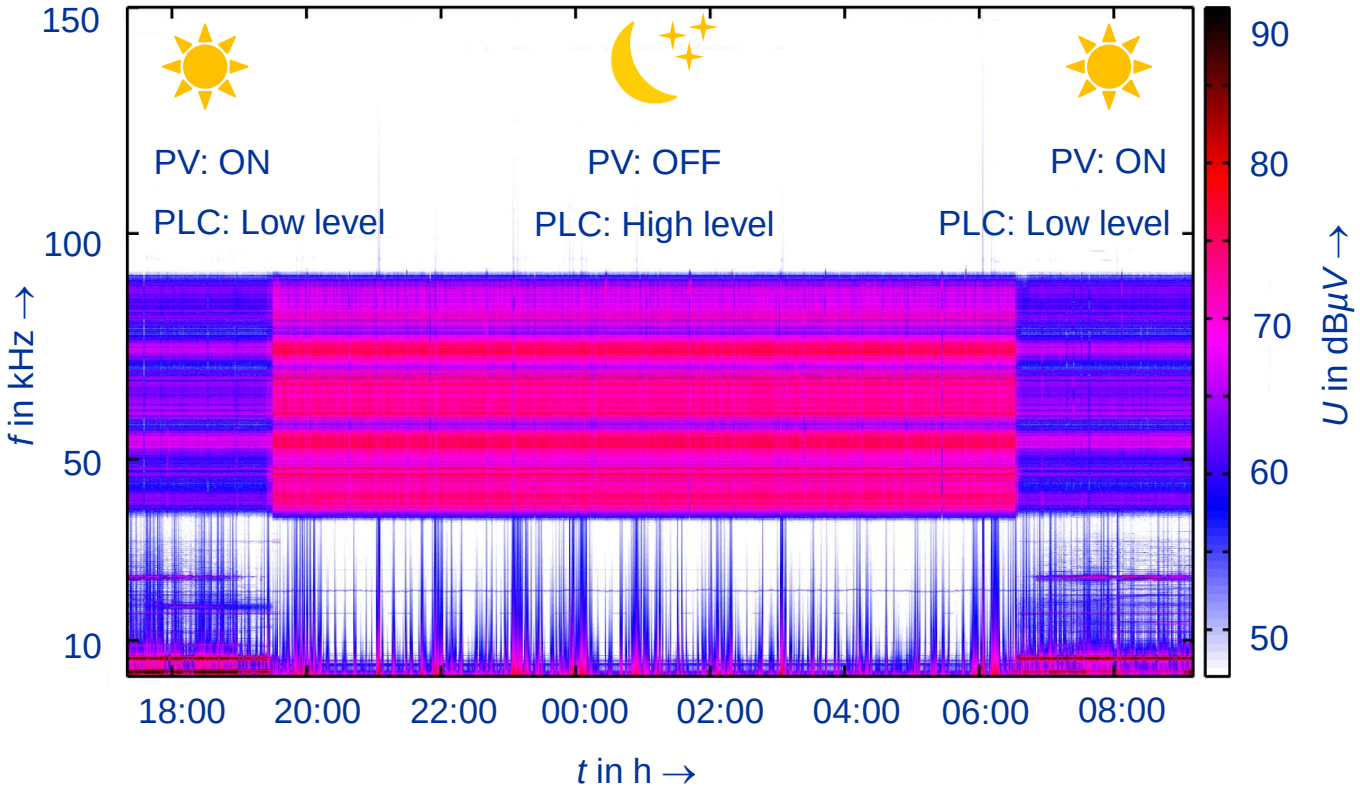

- Significant damping of PLC signal level during the day time

One device can change the situation completely

Network impedance

Importance for definition of emission limits

The EMPIR initiative is co-funded by the European Union's Horizon 2020 research and innovation programme and the EMPIR Participating States

Definition of compatibility levels

Voltage

Derivation of emission limits

Voltage

< 9 kHz

Specified as current

$$I_{\lim}(f) = \frac{U_{\lim}(f)}{Z(f)}$$

IEC 61000-4-7 (Annex B)

> 9 kHz

Specified as Voltage
at a reference impedance

CISPR 16-1-2 (Line Impedance Stabilization Network)

Laboratory representation

IEC 61000-4-7 (Annex B)

The EMPIR initiative is co-funded by the European Union's Horizon 2020 research and innovation programme and the EMPIR Participating States

Equivalent circuit

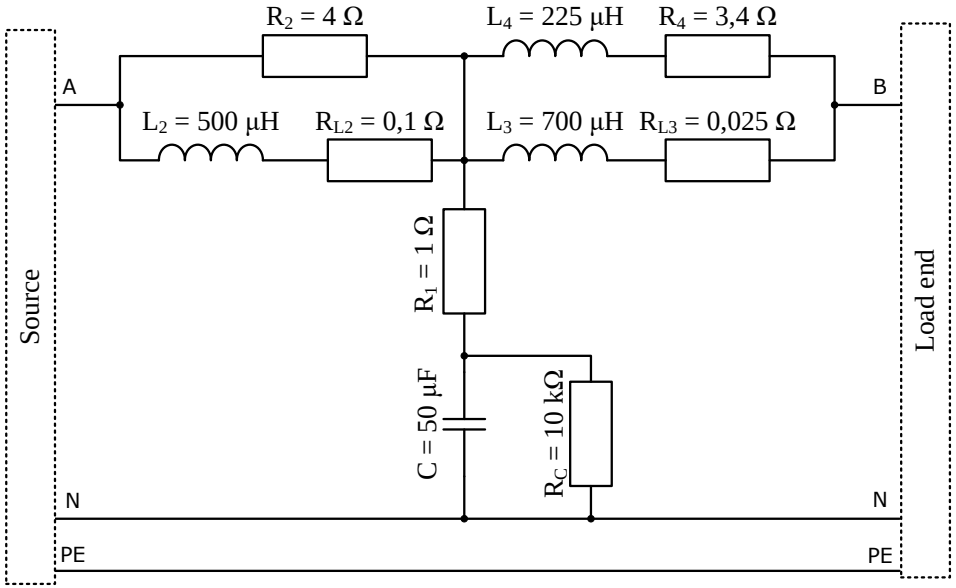

Impedance characteristic

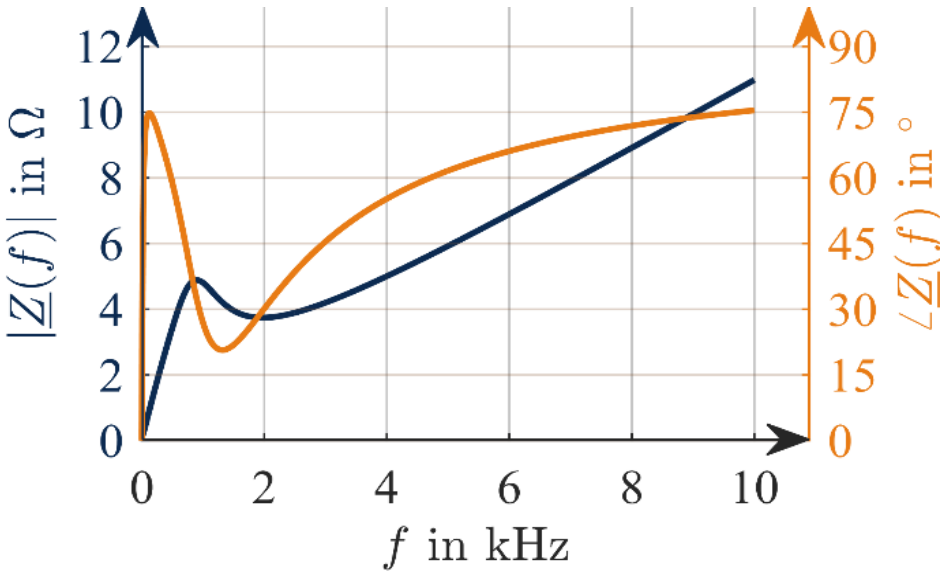

- Specification as loop impedance
- Adaption necessary for assessment of emission of „true“ 3-phase devices

Laboratory representation

CISPR 16-1-2 Line Impedance Stabilization Network (LISN)

The EMPIR initiative is co-funded by the European Union's Horizon 2020 research and innovation programme and the EMPIR Participating States

Equivalent circuit

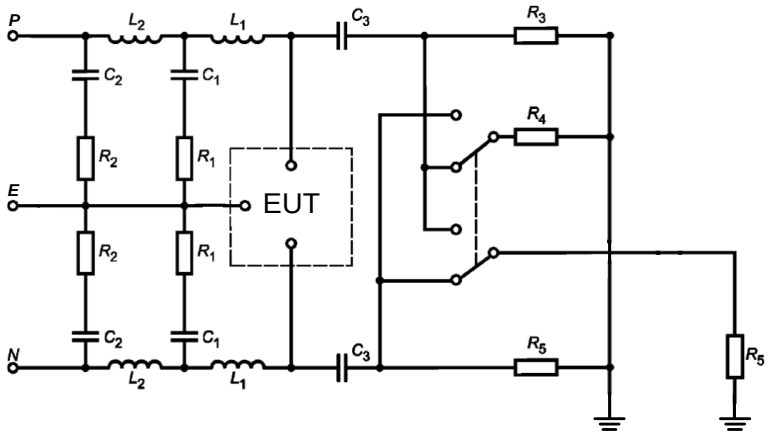

Impedance characteristic

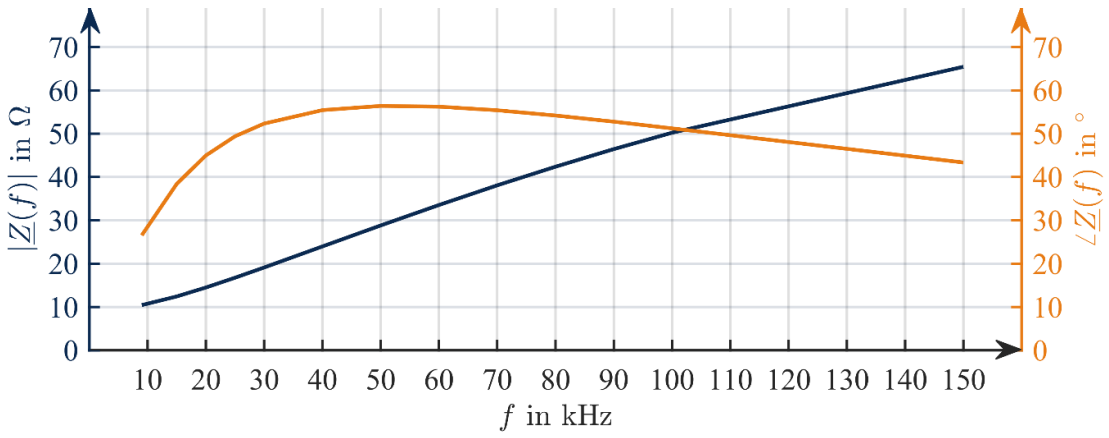

- 50 Ω / 50 µH + 5 Ω artificial mains V-network,
- Symmetrical impedances between phase (P), neutral (N) and earth (E)

- Decoupling of the EUT from the mains supply
- Ensuring the specified impedance at the EUT terminal

Suitability of LISN for representation of network impedance in public low voltage grid?

Survey of network impedance

Measurement campaign

The EMPIR initiative is co-funded by the European Union's Horizon 2020 research and innovation programme and the EMPIR Participating States

- **Objectives**:

  Representative set of network impedance measurements in public low voltage networks

- **Framework:**

  Measurement together with 13 DSO's:

  - Switzerland (4), Austria (3), Czech Republic (1), Germany (5)

  Selection of networks:

  - At least one urban ("stronger") and one rural ("weaker") network per DSO
  - Short circuit power at the final sites provided by DSO
  - Accessibility of the measurement sites

Overview of measured networks

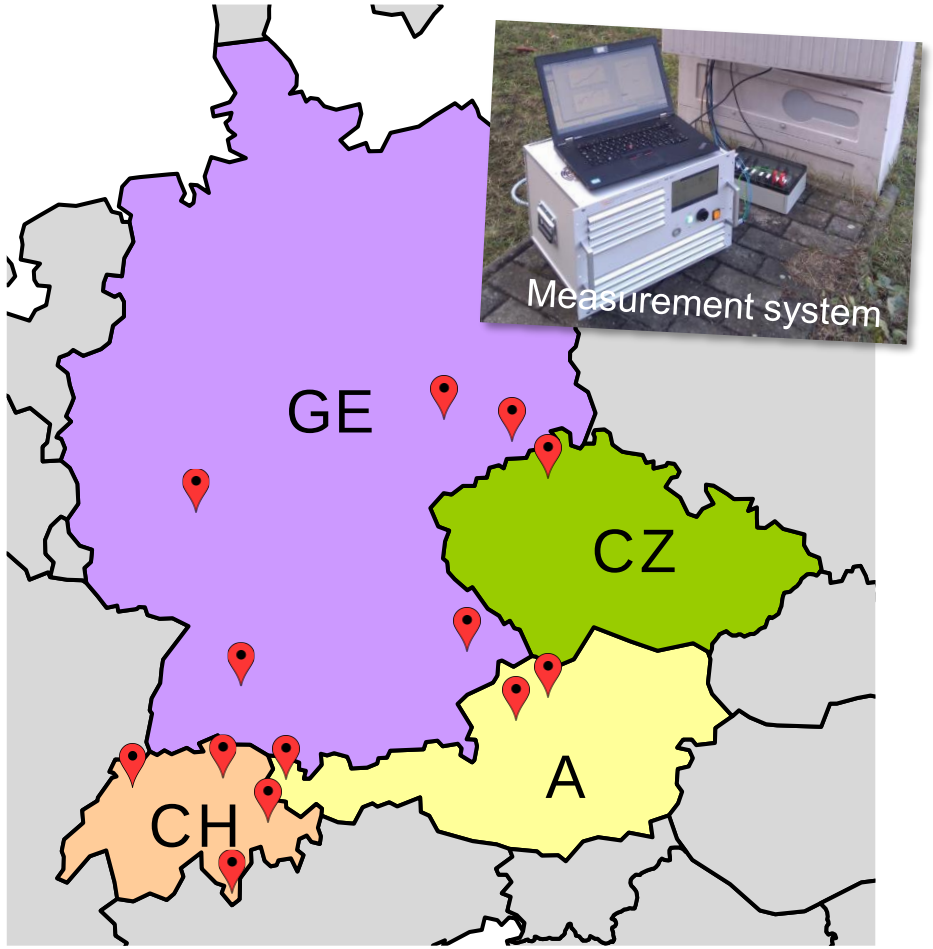

Survey of network impedance

Selection of measurement sites

The EMPIR initiative is co-funded by the European Union's Horizon 2020 research and innovation programme and the EMPIR Participating States

- **Criteria:**
  - High short circuit power (S_{sc}): transformer station (TS)
  - Low S_{sc} : junction box (JB) at farthest feeder
  - Optional: additional JB in the middle of the network
- **Measurement sites**:

  198 single measurements at 76 measurement sites:
  - 25% at transformer stations (TS)
  - 75% at junction boxes (JB)

  Comparison of S_{sc} :
  - Comparable ranges of S_{sc} between countries
  - Higher S_{sc} of sites in Switzerland
  - Lower S_{sc} of sites in Czech Republic

Example of urban network

Cumulative distribution function of S_{sc}

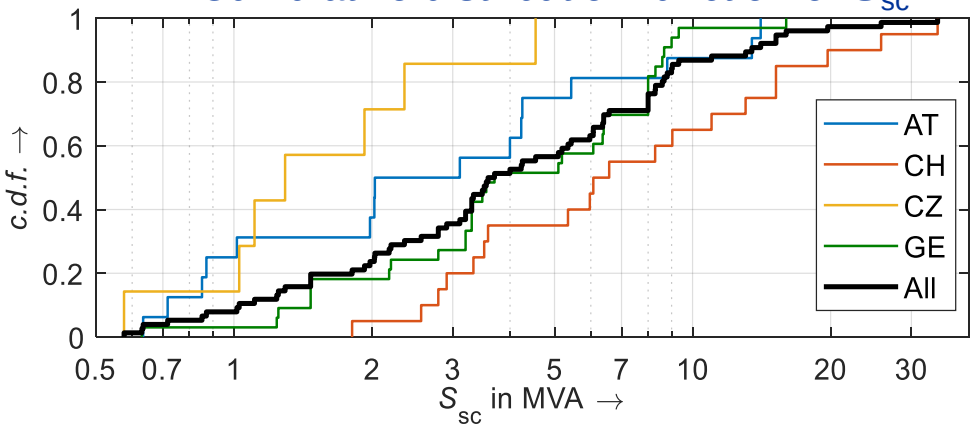

Measurement results

Results for one network

The EMPIR initiative is co-funded by the European Union's Horizon 2020 research and innovation programme and the EMPIR Participating States

Measurements at different sites of the network

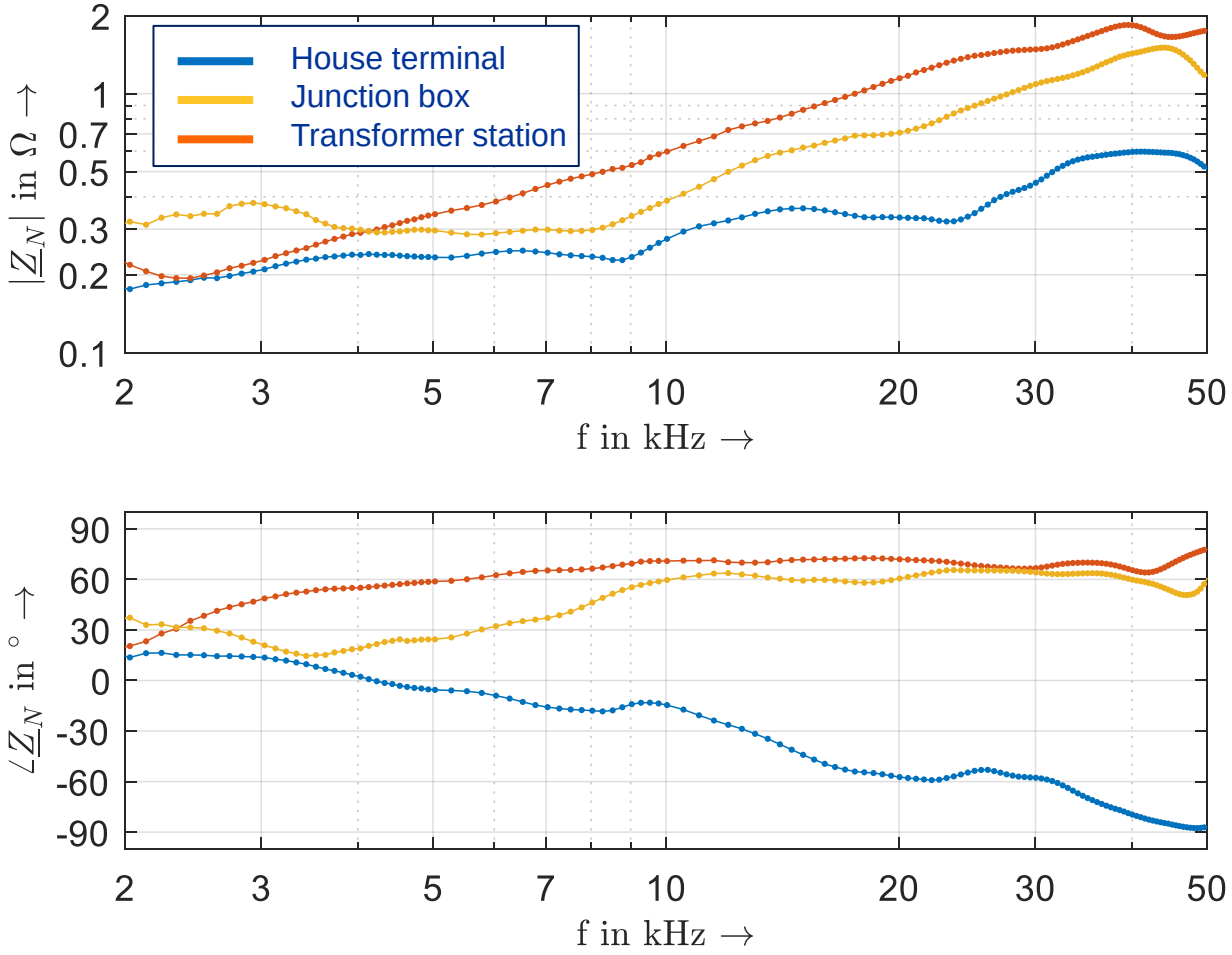

Measurement at house terminal:

- Lowest loop impedance
- Clear capacitive behaviour
- dominate impact of customer appliances connected to the network

Opposite behavior compared to frequencies below 2 kHz

Measurement results

Overview of all measurements

The EMPIR initiative is co-funded by the European Union's Horizon 2020 research and innovation programme and the EMPIR Participating States

Loop impedances

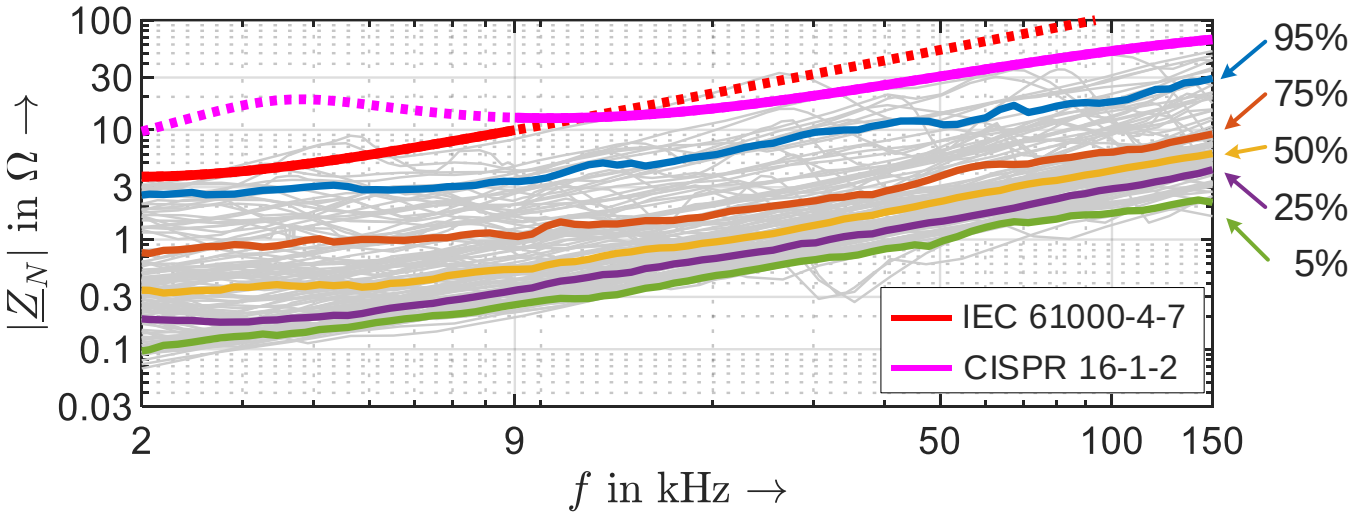

Phase diversity

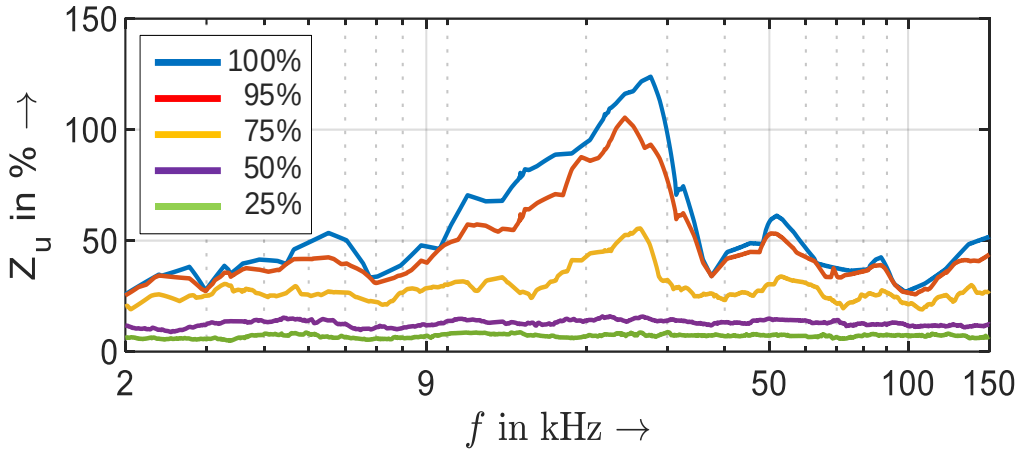

$$z_{\mathrm{u,k}}(f) = \left| \frac{Z_{\mathrm{k}}(f)}{\frac{1}{3}\sum_{i=1}^{3} Z_i(f)} - 1 \right| \cdot 100\%$$

- Large variation range (about 2 decades) with several distinct resonances
- Almost all measurements are below reference impedances
  - ➢ feasible for calculation of emission limit of “small” devices
  - ➢ conservative for calculation of emission limit of “larger” devices or installations

- Low diversity for 75% of measurement sites ($z_{\mathrm{u,k}}(f) < 20\%$)
- High diversity at higher frequencies and resonance frequencies

Summary

The EMPIR initiative is co-funded by the European Union's Horizon 2020 research and innovation programme and the EMPIR Participating States

Network impedance above 2 kHz:

- Large variation range
- Conservative representation by reference impedances (IEC 61000-4-7, CISPR 16-1-2)
- Weak link to short-circuit power
- Dominate impact of customer appliances

Future work:

- Survey of network impedance at points of house connection
- Measurement of P-E and N-E network impedances to verify symmetrical behaviour of LISN

The EMPIR initiative is co-funded by the European Union's Horizon 2020 research and innovation programme and the EMPIR Participating States

Thank you for your attention !

Questions ?

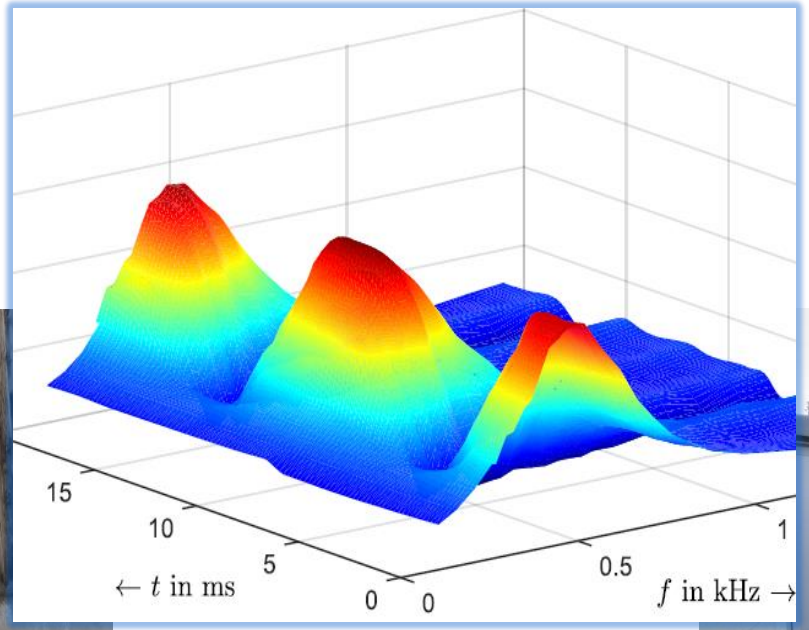

Contact:

Jan Meyer

jan.meyer@tu-dresden.de