Terrestrial and airborne optical analyzers for the detection of greenhouse gases in environmental applications

F. D'Amato[1], S. Viciani[1], M. Barucci[1], A. Montori[1], M. Burton, and A. Chiarugi[2]

(1) CNR-INO, Firenze and Sesto Fiorentino, Italy (2) Manchester University, Manchester, UK
(3) INGV, Pisa, Italy and SENSIT Technologies EMEA, Bolzano, Italy

A SPECTROMETER for STRATOSPHERIC PLATFORMS

COLD 2 is a mid-infrared **Quantum Cascade Laser** (QCL) spectrometer based on **Direct Absorption** in combination with **multipass cell**
The instrument provides **Carbon Monoxide** (CO) and **Nitrous Oxide** (N_2O) mixing ratio values without calibration

COLD operated on board the stratospheric aircraft **Miyashichev M55 Geophysica** with a ceiling up to 21-22 km

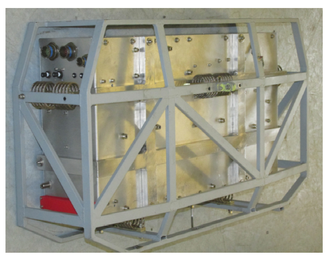

- **small size (80 x 25 x 41 cm³)**
- **light weight (23 kg)**
- **low power consumption 85 W @ 28V**
- **unpressurized operation**
- **unattended operation (or WiFi control)**

CO - ALLAN-WERLE VARIANCE PLOT

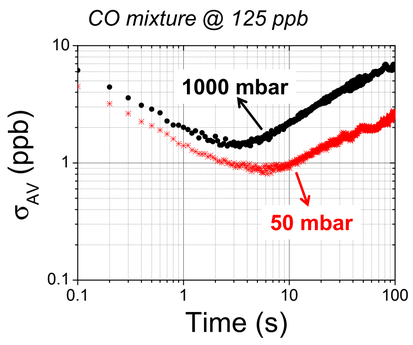

Normalized CO spectrum @ 50mbar
with PZT mounted on the multipass cell

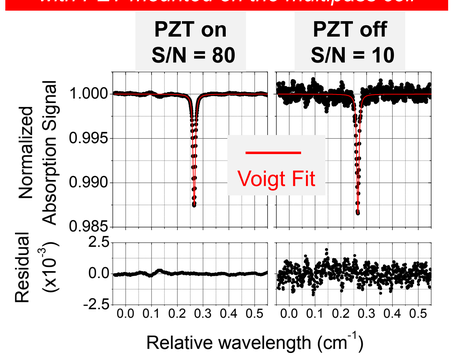

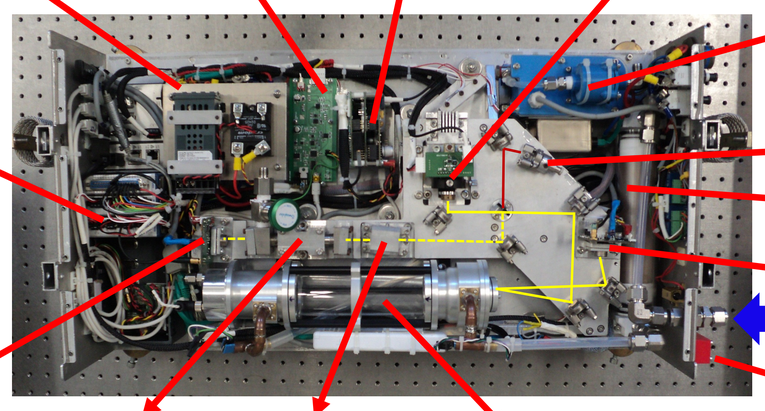

POWER SUPPLY: 2 DC/DC Converters (*TRACO POWER*)
IN 8.5 - 36 V DC OUT 24V DC - 7.5A

QCL TEMPERATURE CONTROLLER: home-made
Temperature Stability: **< 1 mK**

QCL DRIVER: home-made
Noise current: **1 nA/Hz^1/2** in the range 10Hz-1MHz

QUANTUM CASCADE LASER: room temperature CW QCL (*HAMAMATSU*) emitting at **4.6 µm**.
Operating current: **860 mA**
Operating temperature: **27⁰C**

SYSTEM CONTROLLER and ACQUISITION: commercial *NATIONAL INSTRUMENTS* **CompactRIO (cRIO)**, which combines a dual-core processor, a reconfigurable FPGA and 8 slots for I/O channels.
MODULES INSERTED:
- **DAQ** Module: **4 channels**, ±10V, **1 MS/s**, **16 bits** simultaneous
- 32-Channel, TTL Digital Input/Output Module
- 4-Channel, 24-Bit, PT100 Resistance Temperature Detector Analog Input Module

PUMP: flow in the cell: **0.3 l/s**
Time to refresh air inside the cell: **1s**
CO FILTER: filled with Carulite300

ALIGNMENT LASER

HUMIDITY FILTER: silica gel filter

MAIN DETECTOR: InAsSb thermoelectrically stabilized photovoltaic detector (*HAMAMATSU*)

IN GAS

WIRELESS ANTENNA

REFERENCE DETECTOR: InAsSb thermoelectrically stabilized photovoltaic detector (*HAMAMATSU*)

REFERENCE CELL: filled with low pressure CO

ETALON: ZnSe etalon
Free Spectral Range: 0.07 cm⁻¹

MULTIPASS CELL: astigmatic Herriott cell (*Aerodyne AMAC-36LW*)
Volume: **0.3 l** Optical path: **36 m**
Rear mirror mounted on PZT

IN-FLIGHT PERFORMANCES: ➢ **time resolution: 1s** ➢ **accuracy: 3%** ➢ **CO sensitivity: 1 ÷ 2 ppb** ➢ **N_2O sensitivity: 10 ppb**

S. Viciani, A. Montori, A. Chiarugi and F D'Amato: "A Portable Quantum Cascade Laser Spectrometer for Atmospheric Measurements of Carbon Monoxide", Sensors 18, 2380 (2018), doi:10.3390/s18072380

SENSORS for POLLUTANTS DETECTION IN THE EXHAUSTS OF BIOMASS BURNERS

An optical sensor was developed to measure **NH_3 inside an artificial stack** (@ INERIS bench, *Institut National de l'Environnement industriel et des RISques*, France) for different combustions (natural, diesel and biomass) in order to **validate the optical techniques** for in-line concentration measurements.

ARTIFICIAL STACK
Temperature: **140 ⁰C**
Pressure:1009 mbar

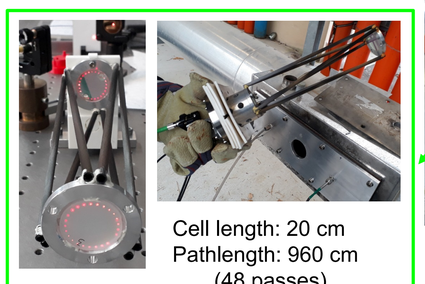

Cell length: 20 cm
Pathlength: 960 cm
(48 passes)

DETECTION TECHNIQUE:
Direct Absorption (DA) + Second Derivative (SD)

OPTICAL SETUP

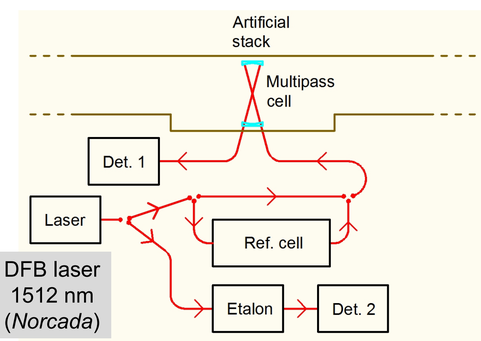

DFB laser 1512 nm (*Norcada*)

BK7 Etalon

Detectors: InGaAs PIN (*Hamamatsu*)

ELECTRONIC SETUP

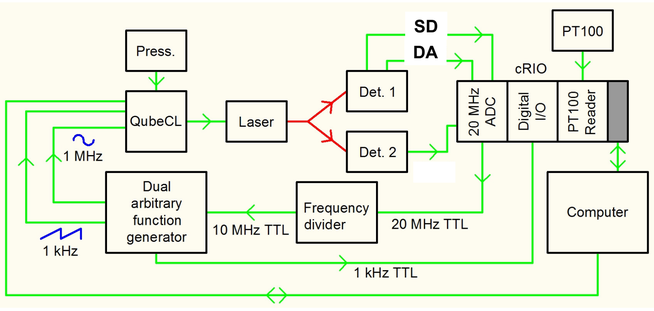

- Ramp Frequency: **1 kHz**
- Frequency Modulation: **1 MHz**
- **DIGITAL LOCK-IN** implemented with **FPGA**

ACQUISITION

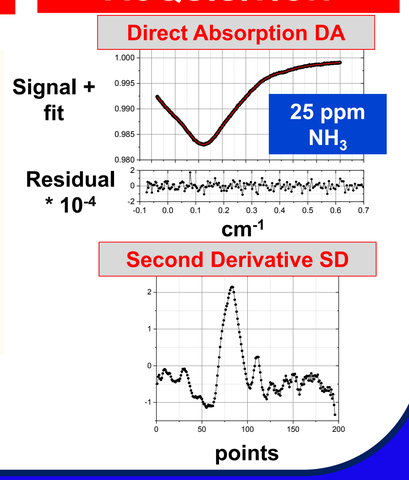

INSTRUMENTS for VOLCANIC APPLICATIONS

The volcanic analyzer is a portable experimental platform for in-situ real time simultaneous absolute concentration measurements of 5 volcanic gases:

♦ **NIR spectrometer for HF, CO_2 and H_2O** ♦ **NIR/MIR) spectrometer for HCl** ♦ **UV spectrometer for SO_2**

THE PLATFORM

60 x 40 x 25 cm
23 kg

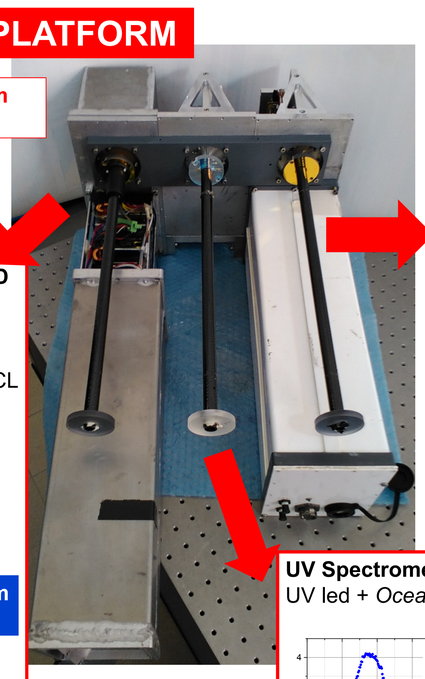

Tunable diode lasers MID IR spectrometer for HCl

SOURCES: DFB Distributed Feedback or ICL Inter Cascade Lasers @ **3.4 µm** – *Nanoplus*

Signal + fit + residual (* 10⁻³)

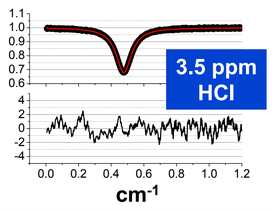

Tunable diode lasers NIR spectrometer for HF, CO_2 and H_2O

SOURCES: DFB fiber coupled lasers @ **2.0 µm** (CO_2 and HF) and @ **1.3 µm** (HF) - *Nanoplus*

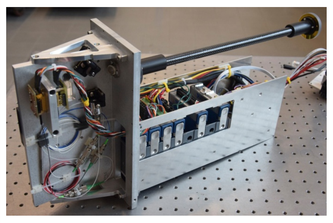

UV Spectrometer for SO_2
UV led + *Ocean Optics* spectrometer

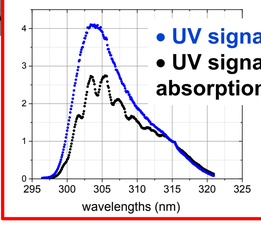

DETECTION TECHNIQUE:
Direct Absorption in combination with Multipass Cell (optical path length 20 m)

MAIN FEATURES

- **COMPACTNESS** and **LOW WEIGHT** for field portability
- **LOW POWER CONSUMPTION** for battery operation
- **ROBUSTNESS** to operate in hostile environments (high humidity, fast changes of temperature and fumigation by acid gases)
- **UNATTENDED OPERATION** (or remotely controlled via WiFi) on ground or onboard light aircraft and helicopters

IN-FLIGHT MEASUREMENTS

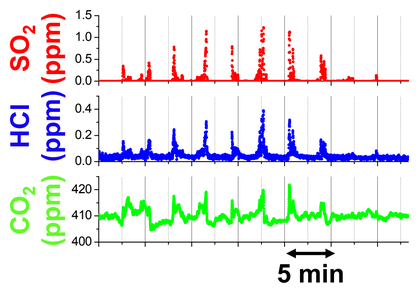

Bromo volcano (Indonesia, August 2016) Aircraft path across the volcanic plume

SENSITIVITY

- **HCl, HF ⇒ 25 ppb**
- **CO_2 ⇒ 2 ppm**
- **SO_2 ⇒ 200 ppb**
- **H_2O ⇒ 0.1 %**

DRONE ANALYZER

- **IR CHANNEL:**
  - 3 DFB fiber lasers: 1278 nm for **HF**, 1742 nm for **HCl**, 2004 nm for **CO_2** *(Nanoplus)*
  - RED PITAYA (125 MS/s @ 14 bit)
- **UV CHANNEL**
  - UV led + *Ocean Optics* spectrometer for **SO_2**
  - RASPBERRY (900 MHz)
- **MULTIPASS CELL**
  - path 1.63 m (version 1)
  - path 20 m (version 2)
- **WEIGTH**
  - 3 kg (version 1)
  - 3.3 kg (version 2)

A. Chiarugi, S. Viciani, F. D'Amato, M. Burton: "Diode laser based gas analyzer for the simultaneous measurement of CO2 and HF in volcanic plumes", Atmos. Meas. Tech. 11, 329-339 (2018), doi:10.5194/amt-11-329-2018